2010011T2BB

higher education & training

Department:
Higher Education and Training
REPUBLIC OF SOUTH AFRICA

T1540(E)(N12)T
NOVEMBER 2010

NATIONAL CERTIFICATE

MECHANOTECHNOLOGY N3

(8190373)

12 November (X-Paper)
09:00 – 12:00

Calculators may be used.

This question paper consists of 7 pages, 2 annexures and a 1-page formula sheet.

DEPARTMENT OF HIGHER EDUCATION AND TRAINING
REPUBLIC OF SOUTH AFRICA

NATIONAL CERTIFICATE
MECHANOTECHNOLOGY N3
TIME: 3 HOURS
MARKS: 100

INSTRUCTIONS AND INFORMATION

1. Answer ALL the questions.
2. Read ALL the questions carefully.
3. Number the answers correctly according to the numbering system used in this question paper.
4. ALL the drawings must be large, clear, neat and in good proportion.
5. Keep questions and subsections of questions together.
6. Write neatly and legibly.

QUESTION 1: POWER TRANSMISSION

1.1 A 16 N SPB wedge belt is installed between a compressor and a 15 kW electric motor with a speed ratio of 1,79:1. The speed of the pulley on the compressor is 700 r/min and that of the electrical motor is 1 440 r/min. The approximate centre distance between the drive is ±767 mm. The service factor is 1,1. Use the following information to partially design the belt drive:

Refer to TABLE 1 and TABLE 2.

1.1.1 Determine the correction factor. (1)
1.1.2 Calculate the design power. (1)
1.1.3 Determine the pitch diameters of both pulleys. (2)
1.1.4 Calculate the belt length. (3)

1.2 Refer to FIGURE 1 below of the cross sectional view of a V-belt:

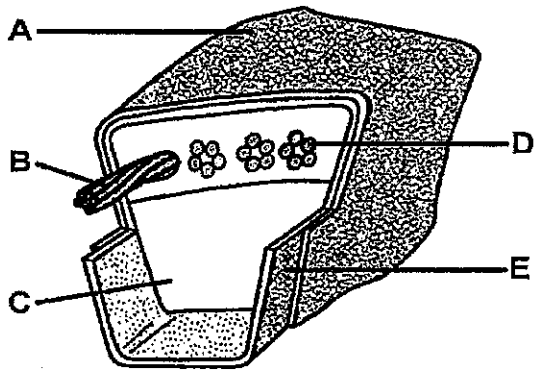

FIGURE 1

Label the different parts (A – E) as indicated above. Write only the answer next to the letter (A – E) in the ANSWER BOOK. (5)

1.3 Name the FOUR main categories that clutches can be grouped in. (4)

1.4 Indicate whether the following statements are TRUE or FALSE. Choose the answer and write only 'true' or 'false' next to the question number (1.4.1 – 1.4.4) in the ANSWER BOOK.

1.4.1 The module of a gear is the ratio between the circular pitch and the number of teeth on the gear and is measured in millimetres. (1)

1.4.2 The dedendum of a gear tooth is the radial height of the tooth above the circular pitch. (1)

1.4.3 The brake shoes around the drum of the electromagnetic braking system will disengage (release) in the case of a power failure, thus causing the load to fall. (1)

1.4.4 A disadvantage of the disc brake system is that water and dust are not thrown off easily by the centrifugal force and they enter the friction surface easily and thereby cause excessive wear on the friction surfaces. (1)

[20]

QUESTION 2: BRAKES

Briefly describe FIVE disadvantages of the disc brake system. **[5]**

QUESTION 3: BEARINGS

3.1 Give FIVE reasons that may cause vibration and might have a harmful effect on an anti-friction bearing. (5)

3.2 Refer to FIGURE 2 of the bearing.

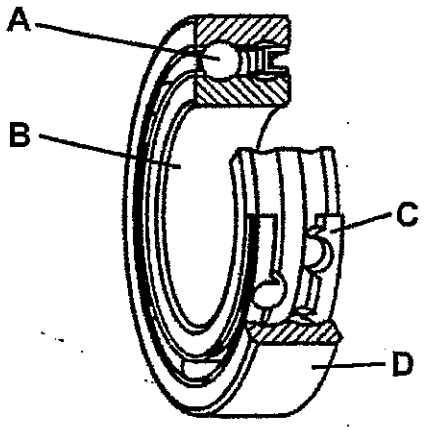

FIGURE 2

3.2.1 What type of bearing is shown? (1)

3.2.2 What type of load can this bearing carry? (1)

3.2.3 Name the parts (A – D) as indicated. Write only the answer next to the letter (A – D) in the ANSWER BOOK. (4)

[11]

QUESTION 4: WATER PUMPS, COOLING AND LUBRICATION

4.1 Define the following terms:

4.1.1 Manometric head (2)

4.1.2 Required head (2)

4.2 Except from applying lubrication with an oil can or grease pot, name FIVE OTHER main methods to apply lubrication to machine components or moving parts. (5)

4.3 Briefly describe TWO main reasons why it is necessary for compressors to be cooled. (2)

4.4 Indicate whether the following statements are TRUE or FALSE. Choose the answer and write only 'true' or 'false' next to the question number (4.4.1 – 4.4.3) in the ANSWER BOOK.

4.4.1 The manometric head is the vertical distance or height at which a pump can deliver fluids under perfect conditions. (1)

4.4.2 In an indirect cooling system the heat is transferred from the engine to the water which flows around it. (1)

4.4.3 The heat exchanger that consists of a bundle of tubes and a shell and the water circulating around the tubes, is often referred to as 'saturated water'. (1)

[14]

QUESTION 5: HYDRAULICS AND PNEUMATICS

5.1 The diameter of a plunger in a hydraulic cylinder is 45 mm and the length of the cylinder is 120 mm. During operation a pressure of 340 kPa is exerted on the plunger.

Calculate the following:

5.1.1 The cross sectional area of the plunger (express the answer in m^2) (1)

5.1.2 The force on the plunger (express the answer in newton) (1)

5.1.3 The work done by the plunger, if the plunger moved a distance of 80 mm (express the answer in joule) (1)

5.2 State THREE functions of the accumulator in a hydraulic system. (3)

5.3 Make neat drawings of the ISO symbols as applicable to pneumatic systems of the following:

5.3.1 A compressor (1)
5.3.2 A lubricator (1)
5.3.3 A pressure relief valve (2)

[10]

QUESTION 6: INTERNAL COMBUSTION ENGINES

Refer to FIGURE 3 of a two-stroke diesel engine:

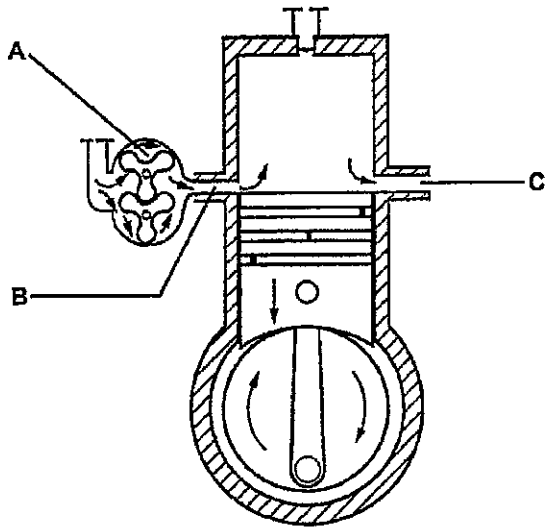

FIGURE 3

6.1 Name the parts (A – C) as indicated. Write only the answer next to the letter (A – C) in the ANSWER BOOK. (3)

6.2 Name the TWO phases during the downward stroke of the piston. (2)
[5]

QUESTION 7: CRANES AND LIFTING MACHINES

7.1 Briefly describe FIVE disadvantages of static tower cranes. (5)

7.2 Briefly describe THREE advantages of the infrared signal remote control when comparing it to the driver's cabin on the overhead crane. (3)
[8]

QUESTION 8: MATERIAL AND MATERIAL PROCESSES

8.1 Describe FOUR results of annealing as a heat treatment process. (4)

8.2 When adding an alloy in various proportions to iron, specific properties of metals can be obtained. Name FOUR of these specific properties of metals. (4)
[8]

QUESTION 9: INDUSTRIAL ORGANISATION AND PLANNING

9.1 Briefly describe the purpose of the Occupational Health and Safety Act, 1993 (Act No 85 of 1993). (4)

9.2 Define the term *capital budget*. (5)

9.3 Briefly describe THREE methods to improve horisontal communication, as part of the communication channels, in an organisation. (3)
[12]

QUESTION 10: ENTREPRENEURSHIP

10.1 Briefly explain the term *SWOT analysis* that will be utilized in the erecting of a prospective business. (4)

10.2 Name THREE pre-established basic principles that an entrepreneur will have in mind before starting a successful financial project. (3)
[7]

TOTAL: 100

MECHANOTECHNOLOGY N3

TABLE 1

SERVICE FACTORS FOR THE SELECTION OF WEDGE BELTS

TYPES OF DRIVEN MACHINES	TYPES OF PRIME MOVERS					
	'Soft' starts			'Heavy' starts		
	Hours per day duty			Hours per day duty		
	10 and under	Over 10 to 16	Over 16	10 and under	Over 10 to 16	Over 16
Class 1 – Light duty Blowers and fans Centrifugal compressors and pumps Belt conveyors (uniformly loaded)	1,0	1,1	1,2	1,1	1,2	1,3
Class 2 – Medium duty Blowers and fans Rotary compressors and pumps Belt conveyors (not uniformly loaded) Generators	1,1	1,2	1,3	1,2	1,3	1,4
Class 3 – Heavy duty Brick machinery Compressors and pumps (reciprocating) Conveyors (heavy duty) Hammer mills Punches and presses	1,2	1,3	1,4	1,4	1,5	1,6
Class 4 – Extra heavy duty Crushers Mills	1,3	1,4	1,5	1,5	1,6	1,8

MECHANOTECHNOLOGY N3

TABLE 2

CENTRE DISTANCES FOR 16 N SPB WEDGE BELT DRIVES

Combined arc and belt length Correction factor					0,8			0,85			0,9				1,05			
Speed Ratio	Pitch diameter of pulleys		Power per belt kW		BELT LENGTH													
	Driver	Driven	960 r/min	1 440 r/min	1 260	1 340	1 410	1 590	1 800	1 900	2 020	2 150	2 280	2 400	4 560	4 820	5 070	5 380
1,69	236	400	11,94	16,56	-	-	-	-	392	443	504	570	635	696	1 779	1 909	2 034	2 189
1,75	160	280	6,45	8,92	278	319	355	446	551	602	662	727	792	852	-	-	-	-
1,75	180	315	7,92	11,00	-	273	309	401	507	557	618	683	748	809	-	-	-	-
1,78	200	355	9,38	13,03	-	-	-	351	458	508	569	635	700	760	1 843	1 973	2 098	-
1,79	140	250	4,95	6,80	319	360	395	486	591	641	702	767	832	892	-	-	-	-
1,79	224	400	11,10	15,41	-	-	-	-	400	452	513	578	644	705	1 788	1 918	2 043	2 198

MECHANOTECHNOLOGY N3

FORMULA SHEET

Any applicable formula may also be used.

1. *Design power = Power (electrical motor) × service factor*

2. *Corrected power per belt = (basic power per belt + power increment per belt) × correction factor*

3. *Belt length (L) = [(Pitch diameter of larger pulley + Pitch diameter of smaller pulley) × 1,57] + (2 × Centre Distance)*

4. *Force (F) = Pressure (P) × Area (A)*

5. *Work done (W) = Force (F) × Distance (s)*

6. *Volume (V) = Area of base (A) × Perpendicular height* $(\perp h)$